HRD92 防爆高效节能LED灯

HRD92 Explosion-proof High Efficiency Energy-saving LED Light

应用场所 Application

- 广泛应用于海洋工程各类作业平台、各类化学品、天燃气运输船、危险品码头等危险区域作工作及场景照明之用；
- 可在潮湿、振动、腐蚀等恶劣环境中可靠工作；
- 适用于爆炸性危险环境1区、2区、21区、22区等场所。
- Widely used for the illumination on various marine platforms, chemical tankers, LNG ships and hazardous cargo wharfs, etc..
- Can reliably work in severe environment exposed in moisture, vibration or corrosion;
- Explosive hazardous atmosphere Zone 1, Zone 2, Zone 21, Zone 22.

灯体 Housing

- 优质海工铝合金，表面喷塑
- High quality maritime aluminum alloy, powder coated surface

透明罩 Transparent cover

- 钢化玻璃，抗4J冲击
- Toughened glass, stands 4J impact

电气 Electric

- 恒流恒压驱动电源，宽电压输入100V~277V AC 50/60Hz
- Constant current constant voltage drive power, wide voltage input 100V~277V AC 50/60Hz

选配表 Selection table

型号 Type	额定电压(V) Rated voltage	额定功率(W) Rated power	光通量(lm) Luminous flux	防爆标志 Ex-Mark	重量(kg) Weight
HRD92-30	220V/230V 50/60Hz	30W	2480	Ex d IIC T□[1] Gb Ex tD A21 IP66 T□[1]℃ [1] 见选配表 [1] See Selection Table	2.1
HRD92-50		50W	5530		2.8
HRD92-70		70W	7270		2.8
HRD92-100		100W	6820		6.8

- 灯具出厂时配防爆堵头，若用户需要防爆电缆夹紧密封接头，请注明。
- The light fitting is supplied with Ex type stopping plug and Ex cable gland is on request.

防爆标志选配表 Ex-Mark Selection table

额定功率(W) Rated power	温度组别 Temperature classification			
	-40℃≤Ta≤+40℃		-40℃≤Ta≤+55℃	
	气体 Gas	粉尘 Dust	气体 Gas	粉尘 Dust
30, 50, 70, 100	T6	80℃	T5	95℃

技术参数 Technical parameters

执行标准 Conformity to standards	IEC60079, EN60079, GB3836, GB12476, CCS入级规范 (CCS standard)
环境温度 Ambient temperature	−40℃~+55℃
光源类型 Light source	LED 模组 LED module
色温 Color temperature	5700K ± 250K
显色指数 Color rendering index	Ra≥70
防护等级 Degree of protection	IP66
防腐等级 Corrosion-proof	WF2
电缆引入口 Cable entris	4 × M25 × 1.5堵头(铝合金)，推荐配2 × M25 × 1.5格兰(黄铜镀镍) DQM−II/III Exd，适用于Φ12.5~Φ20.5mm电缆 4×M25×1.5 plug (Aluminum alloy), 2×M25×1.5 gland (Nickel plated brass) DQM-II/III Exd is recommended, suitable for Φ12.5~Φ20.5mm cable
接线端子 Terminal	3 × 1.5~4mm²

外形尺寸 Outline dimension

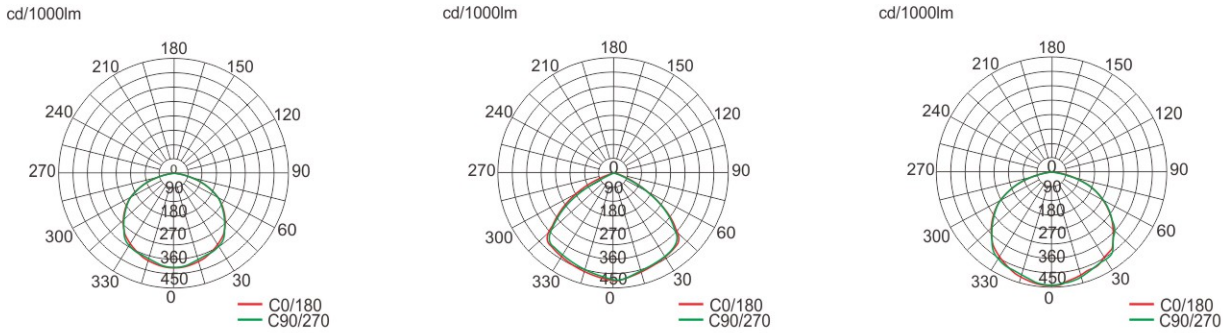

配光曲线
Light distribution curve

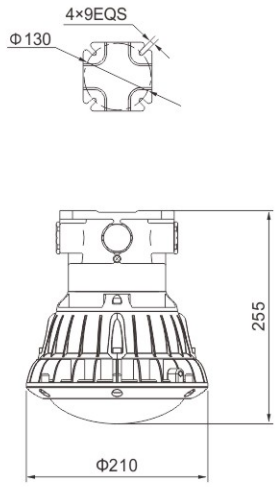

30W

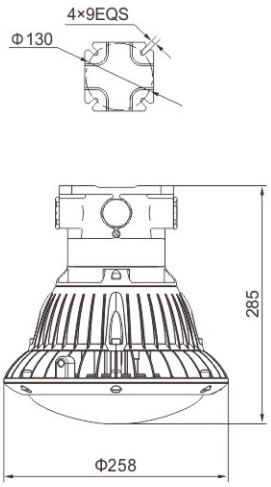

50W、70W

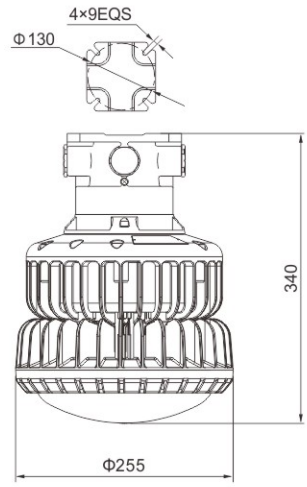

100W